BarCodes & More

Installation & Test Guide

For HP LaserJets & MFPs with Host USB(1)

typehaus INCORPORATED

WARNING: Do not insert your BarCodeJet Internal USB device into your PC or system other than your printer. PCs and other systems can automatically erase the device. The device is only compatible with the USB connectors located *inside* your printer.

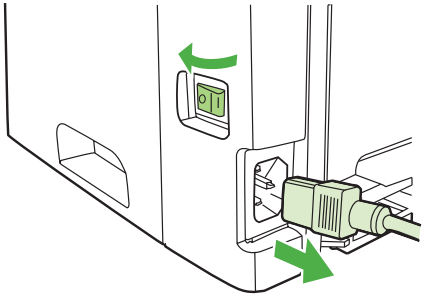

1 Use the power switch to turn off the printer and then unplug the power cord from the printer.

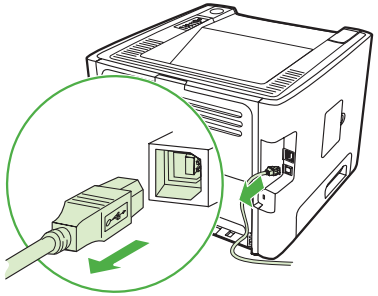

2 Unplug all remaining cables and cords from the printer.

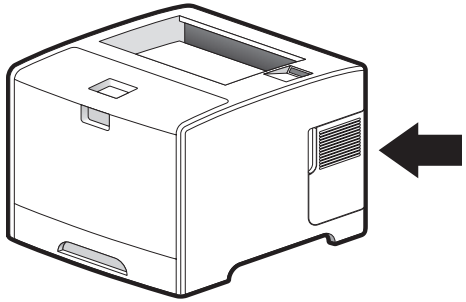

3 Locate the access door located on the side of the printer. The location can vary by model.

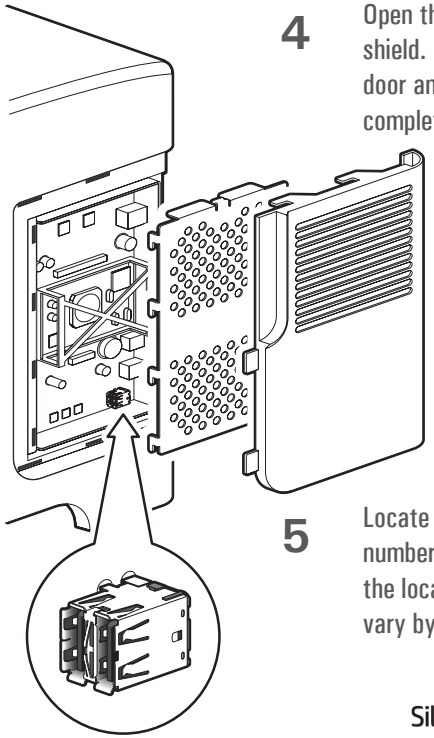

4 Open the access door and metal shield. On some models the door and shield may remove completely.

5 Locate the USB connectors. The number of USB connectors, and the location and orientation can vary by model.

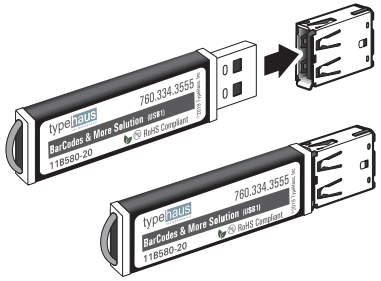

6 Insert the solution into any open USB connector inside the printer. The solution will only insert in one orientation. If it does not insert easily, rotate it and try again. Never use strong force. Strong force may damage your printer.

7 Close the shield and access door, reconnect all cables and cords, then turn the power switch on.

HP JetAdvantage Silver Solution Partner

Congratulations!

You are now ready to print bar codes (and more) using your printer. To test your BarCodes & More, simply use your printer's control panel to print a PCL Font List. On most printer models, select "Information" and then "Print PCL Font List".

See the reverse side of this sheet for an example of the first page of a PCL Font List showing the BarCodes & More fonts. The PCL Font List may vary a little between different printer models, but the bar code fonts will be shown somewhere in the list.

TypeHaus Reorder Part Number: 11B580-20

760.334.3555
www.typehaus.com

© 2019 TypeHaus, Inc. All rights reserved. (50073-190702A)

Sample HP LaserJet Font List (First Page Only) Showing BarCodes & More Fonts

HP Color LaserJet

PCL Font List

Page 1

USB STORAGE Resident Fonts

Font	Pitch/Point	Escape Sequence	Font #	Font ID
UPC 10mil	/12.0	<esc>(8Y<esc>(s1p12.0v0s0b0T	USB1 1	
UPC 3m	/12.0	<esc>(8Y<esc>(s1p12.0v0s3b0T	USB1 2	
USPS ZIP	/12.0	<esc>(15Y<esc>(s1p12.0v0s0b0T	USB1 3	
ABCDEfghijÀÂ°ÇÑ¡¿£§ê#$@ô¨^'{|}~123éà LtrGothic	16.67/9.5	<esc>(8U<esc>(s0p16.67h9.5v0s0b6T	USB1 4	
ABCDEfghijÀÂ°ÇÑ¡¿£§ê#$@ô¨^ LtrGothic	12.00/12.0	<esc>(8U<esc>(s0p12.00h12.0v0s0b6T	USB1 5	
ABCDEfghijÀÂ°ÇÑ¡¿£§ê#$ LtrGothic	10.00/14.0	<esc>(8U<esc>(s0p10.00h14.0v0s0b6T	USB1 6	
Line Draw	10.00/12.0	<esc>(0B<esc>(s0p10.00h12.0v0s0b0T	USB1 7	
ABCDEfghij #$ OCR A	10.00/12.0	<esc>(0O<esc>(s0p10.00h12.0v0s0b104T	USB1 8	
Code 3of9	8.11/12.0	<esc>(0Y<esc>(s0p8.11h12.0v0s0b0T	USB1 9	
Code 3of9	4.69/12.0	<esc>(0Y<esc>(s0p4.69h12.0v0s0b0T	USB1 10	
ABCDEfghij Ñ £§ #$ OCR B	10.00/12.0	<esc>(1O<esc>(s0p10.00h12.0v0s0b110T	USB1 11	
Code 128	8.33/12.0	<esc>(2Y<esc>(s0p8.33h12.0v0s0b0T	USB1 12	
Code 128 Wide	4.36/12.1	<esc>(2Y<esc>(s0p4.36h12.1v0s0b0T	USB1 13	

Internal Scalable and Bitmapped Fonts

Font	Pitch/Point	Escape Sequence	Font #	Font ID
Courier	Scalable	<esc>(<esc>(s0p h0s0b4099T	INTERNAL 0	
CG Times	Scalable	<esc>(<esc>(s1p v0s0b4101T	INTERNAL 1	
CG Times Bold	Scalable	<esc>(<esc>(s1p v0s3b4101T	INTERNAL 2	
CG Times Italic	Scalable	<esc>(<esc>(s1p v1s0b4101T	INTERNAL 3	
CG Times Bold Italic	Scalable	<esc>(<esc>(s1p v1s3b4101T	INTERNAL 4	
CG Omega	Scalable	<esc>(<esc>(s1p v0s0b4113T	INTERNAL 5	
CG Omega Bold	Scalable	<esc>(<esc>(s1p v0s3b4113T	INTERNAL 6	
CG Omega Italic	Scalable	<esc>(<esc>(s1p v1s0b4113T	INTERNAL 7	
CG Omega Bold Italic	Scalable	<esc>(<esc>(s1p v1s3b4113T	INTERNAL 8	

Pitch: 0.10 - 576 Symbol set Point size: 0.25 - 999.75

See your Printer User's Manual for more information.